	REVISION DESCRIPTION	CHECK	APP	DATE	REV.NOTICE.NO
△1					
△2					
△3					

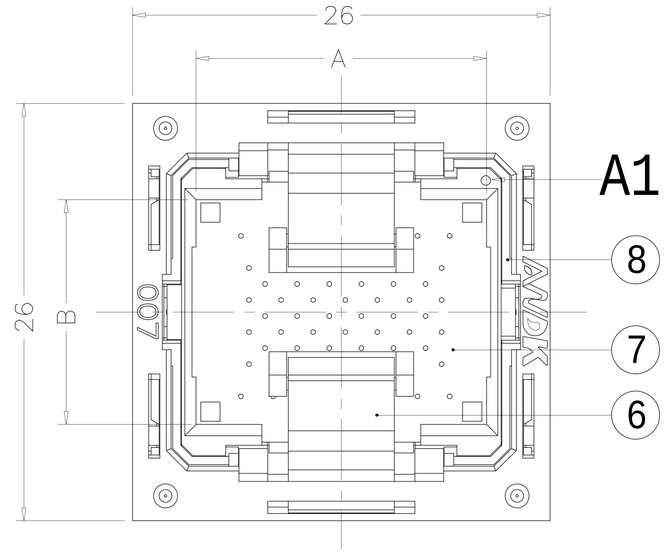

IC Loading Direction
(Center In)

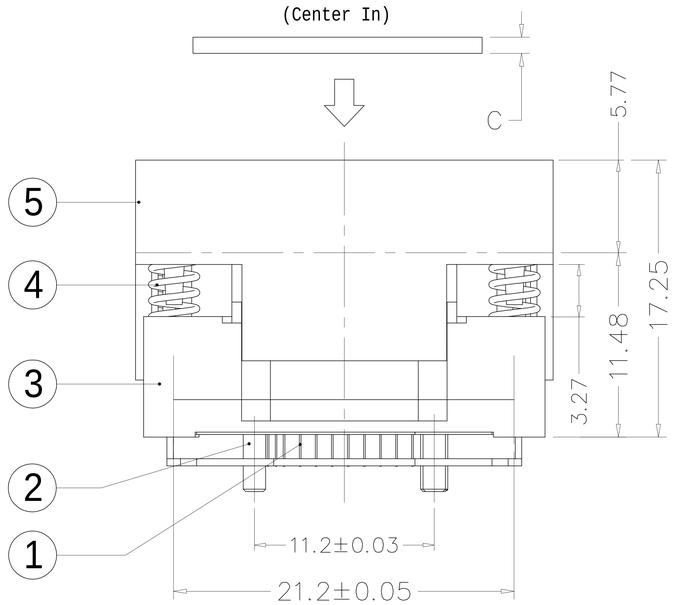

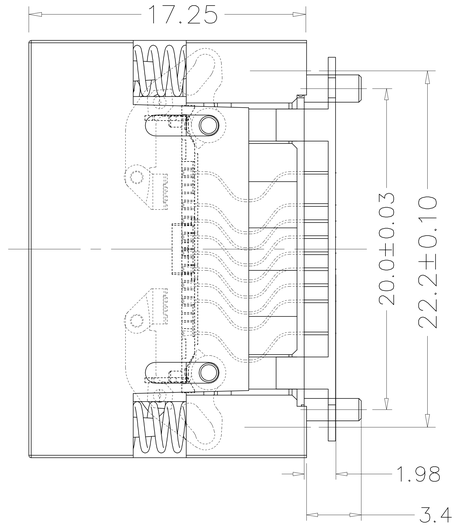

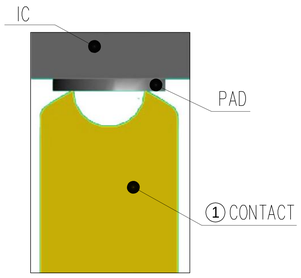

CONTAC TIP DETAIL

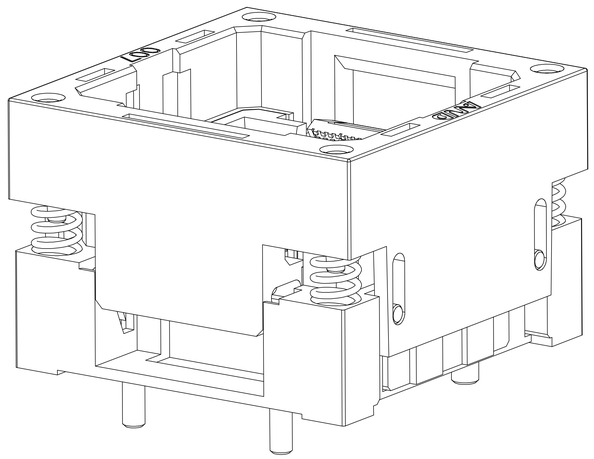

PCB Pattern(TOP View)

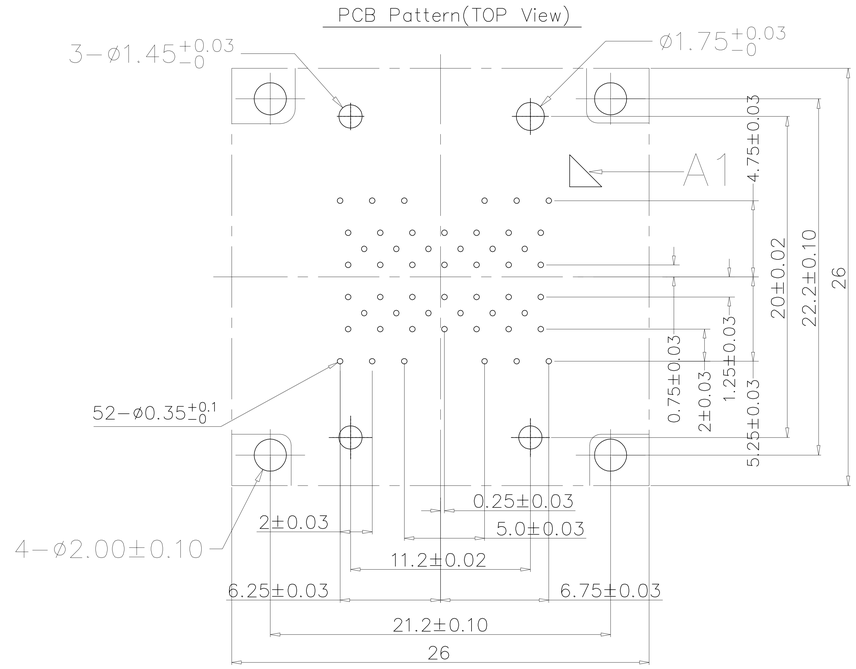

Applicable IC

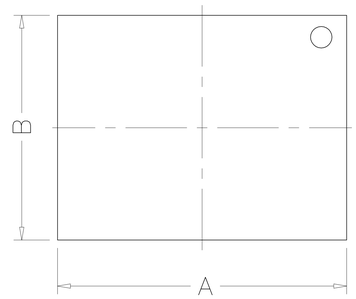

TOP VIEW

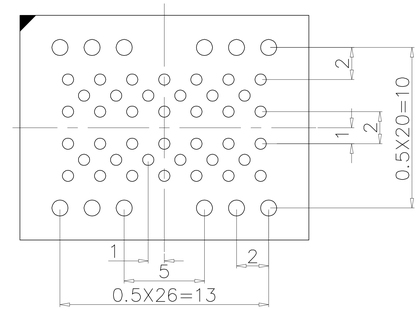

BOTTOM VIEW

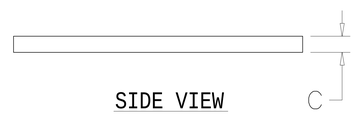

SIDE VIEW

Symbol	Size	Unit	Tolerance
C	0.65/1.0/1.5	mm	±0.05
B	11/12/13/14	mm	±0.10
A	14/17/18	mm	±0.10

PERFORMANCE

1、Insulation Resistance: 1000MΩ Min.At DC 500V
2、Dielectric Withstanding Voltage For 1 Minute At AC 700V
3、Contact Resistance 30mΩ MAX。at 10mA and 20mV MAX.(Initial)
4、Current Rating: 1A max.
5、Operation Temperature −65℃ ~+175℃
6、Contact Force 3−5g Per Pin (Normal)
7、Life Span 25,000 Times (Mechanical)
8、Operation Force 2.0 Kg MAX

No	Part Number	Name	Material	Q/ty	Note
8	310-048-D105D	IC GUIDE	PEI/PES	2	BLACK
7	310-048-C105D	SLIDER	PEI/PES	1	BLACK
6	310-048-C105D	IC HOLDER	PEI/PES	2	BLACK
5	310-048-B105D	COVER	PEI/PES	1	BLACK
4	20-B-4505B	SPRING	SUS	4	FOR COVER
3	310-048-A105D	BASE	PEI/PES	1	BLACK
2	310-048-F105D	LOCATOR	PEI/PES	3	BLACK
1	04-A-1705	CONTACT	BeCu	52	Au PLATING

PROJECTION		GENERAL TOLERANCES	±0.10	TITLE	LGA5201 SOCKET
		R E V	A	CLASS	**007-21052E-2101**
DIMENSION:	mm	SCALE:	1:1	DRW.NO	007-LGA-1.0-52-B-01
APP:		DATE:			
CHECK:		DATE:			
DEGK: ENG02		DATE: 20120605			