JRD320240B

*320 X 240 DOTS 1/240Duty 1/17Bias
Blue mode STN Transflective

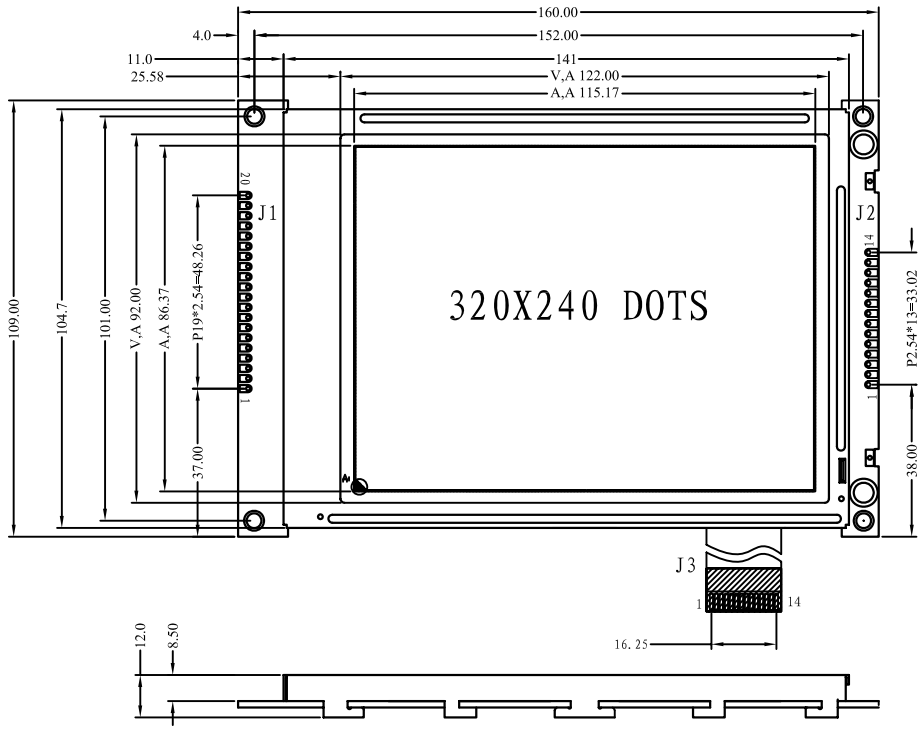

J2/J3

Pin	Symbol
1	D0
2	D1
3	D2
4	D3
5	DIS
6	FLM
7	M
8	LP
9	CP
10	VDD
11	GND
12	VOUT
13	V0
14	FGND

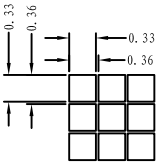

Disply Format
320X240DOTS
Driving Method
1/240 Duty
1/17 Bais

ABSOLUTE MAXIMUM RATINGS

Item	Symbol	Min.	Max.	Unit
Supply Voltage(Logic)	Vdd - Vss	-0.3	5.5	V
Supply Voltage(LCD)	Vdd - V0	-0.3	25.0	V
Input Voltage	Vi	-0.3	Vdd + 0.3	V
Operating Temp.	Topr	-20	70	℃
Storage Temp.	Tstg	-30	80	℃

MECHANICAL DATA

Item	Max.	Unit
Module Size (W X H X T)	167.0 X 109.0 X 12.0	mm
Viewing Area(W X H)	122.0 X 92.0	mm
Dot Pitch(W X H)	0.36 X 0.36	mm
Dot Size(W X H)	0.33 X 0.33	mm
View Angle	6 or 12 O'Clock	

ELECTRICAL CHARACTERISTICS (Vdd=5V±0.25V)

Item	Symbol	Test Condition	Min.	Typ.	Max.	Unit
Input High Voltage	Vih	--	2.0	--	Vdd	V
Input Low Voltage	Vil	--	-0.3	--	0.8	V
Output High Voltage	Voh	Ioh=-0.2mA	2.4	--	Vdd	V
Output Low Voltage	Vol	Iol=-1.6mA	0	--	0.4	V
Supply Current	Idd	Vdd=5.0V	--	7.0	15.0	mA
LCD Driving Voltage	Vdd - V0	Ta=25℃	--	20.0	--	V

PIN CONNECTIONS(J1)

Pin	Symbol	Level	Function
1	GND	0V	Power GND
2	VDD	+5V	Power supply for logic
3	V0	--	Operation voltage for LCD
4	/WR	L	Write signal
5	/RD	L	Read signal
6	/CS	L	Chip enable signal
7	A0	H/L	H: Instruction Code, L: Data
8	/RES	L	Reset signal
9	D0	H/L	Data bit 0
10	D1	H/L	Data bit 1
11	D2	H/L	Data bit 2
12	D3	H/L	Data bit 3
13	D4	H/L	Data bit 4
14	D5	H/L	Data bit 5
15	D6	H/L	Data bit 6
16	D7	H/L	Data bit 7
17	LED+	+5V	Power supply for LED+ backlight
18	VEE	-20V	Output voltage for LCD driving
19	LED+	+5V	Power supply for LED backlight
20	LED-	0V	

BLOCK DIAGRAM

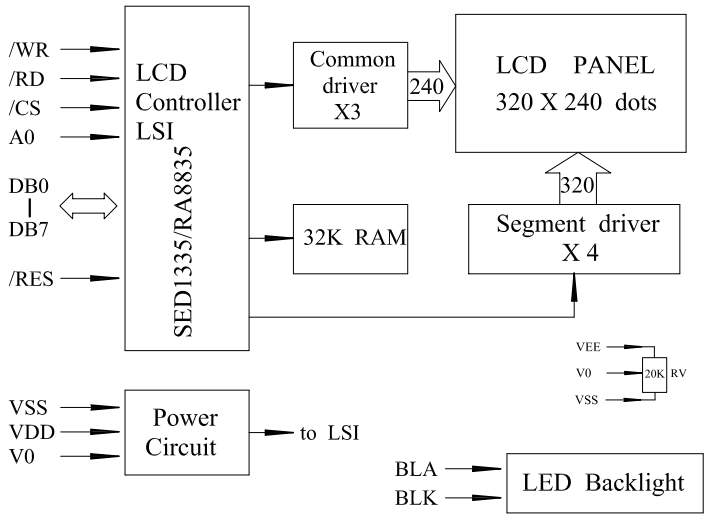

LCD Color	Blacklight
Blue	CCFL
Blue	LED/White /3.1V (≤200mA)