FNK N-Channel Enhancement Mode Power MOSFET

Description

The FNK1520 uses advanced trench technology and design to provide excellent $R_{DS(ON)}$ with low gate charge. It can be used in a wide variety of applications.

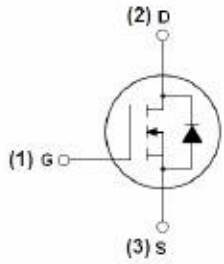

Schematic diagram

General Features

- V_{DS} = 150V, I_D = 20A

  $R_{DS(ON)}$ <85mΩ @ V_{GS}=10V (Typ:78mΩ)

- High density cell design for ultra low Rdson
- Fully characterized avalanche voltage and current
- Good stability and uniformity with high E_{AS}
- Excellent package for good heat dissipation

Marking and pin assignment

Application

- Boost converters
- LED backlighting
- Uninterruptible power supply

TO-220-3L top view

Package Marking and Ordering Information

Device Marking	Device	Device Package	Reel Size	Tape width	Quantity
FNK1520	FNK1520	TO-220-3L	-	-	-

Absolute Maximum Ratings (T_C=25℃unless otherwise noted)

Symbol	Parameter	Limit	Unit
VDS	Drain-Source Voltage	150	V
VGS	Gate-Source Voltage	±20	V
I_D	Drain Current-Continuous	20	A
I_D (100℃)	Drain Current-Continuous(TC=100℃)	14	A
I_{DM}	Pulsed Drain Current	40	A
P_D	Maximum Power Dissipation	75	W
	Derating factor	0.5	W/℃
E_{AS}	Single pulse avalanche energy (Note 5)	200	mJ
T_J,T_{STG}	Operating Junction and Storage Temperature Range	-55 To 175	℃

Thermal Characteristic

$R_{\theta JC}$	Thermal Resistance, Junction-to-Case (Note 2)	2.0	℃/W

Electrical Characteristics (T_C=25℃unless otherwise noted)

Symbol	Parameter	Condition	Min	Typ	Max	Unit
Off Characteristics						
BV_{DSS}	Drain-Source Breakdown Voltage	V_{GS}=0V I_D=250μA	150	160	-	V
I_{DSS}	Zero Gate Voltage Drain Current	V_{DS}=150V,V_{GS}=0V	-	-	1	μA
I_{GSS}	Gate-Body Leakage Current	V_{GS}=±20V,V_{DS}=0V	-	-	±100	nA
On Characteristics (Note 3)						
$V_{GS(th)}$	Gate Threshold Voltage	V_{DS}=V_{GS},I_D=250μA	2	3	4	V
$R_{DS(ON)}$	Drain-Source On-State Resistance	V_{GS}=10V, I_D=10A	-	78	85	mΩ
g_{FS}	Forward Transconductance	V_{DS}=5V,I_D=10A	-	20	-	S
Dynamic Characteristics (Note4)						
C_{Iss}	Input Capacitance	V_{DS}=25V,V_{GS}=0V, F=1.0MHz	-	2000	-	PF
C_{oss}	Output Capacitance		-	290	-	PF
C_{rss}	Reverse Transfer Capacitance		-	180	-	PF
Switching Characteristics (Note 4)						
$t_{d(on)}$	Turn-on Delay Time	V_{DD}=75V,R_L=5Ω V_{GS}=10V,R_{GEN}=3Ω	-	10.5	-	nS
t_r	Turn-on Rise Time		-	5.5	-	nS
$t_{d(off)}$	Turn-Off Delay Time		-	14.5	-	nS
t_f	Turn-Off Fall Time		-	3	-	nS
Q_g	Total Gate Charge	V_{DS}=75V,I_D=10A, V_{GS}=10V	-	17	-	nC
Q_{gs}	Gate-Source Charge		-	4	-	nC
Q_{gd}	Gate-Drain Charge		-	4.4	-	nC
Drain-Source Diode Characteristics						
V_{SD}	Diode Forward Voltage (Note 3)	V_{GS}=0V,I_S=20A	-	-	1.2	V
I_S	Diode Forward Current (Note 2)	-	-	-	20	A
t_{rr}	Reverse Recovery Time	TJ = 25°C, IF = 10A di/dt = 100A/μs(Note3)	-	32	-	nS
Qrr	Reverse Recovery Charge		-	53	-	nC
t_{on}	Forward Turn-On Time	Intrinsic turn-on time is negligible (turn-on is dominated by LS+LD)				

Notes:

1. Repetitive Rating: Pulse width limited by maximum junction temperature.
2. Surface Mounted on FR4 Board, t ≤ 10 sec.
3. Pulse Test: Pulse Width ≤ 300μs, Duty Cycle ≤ 2%.
4. Guaranteed by design, not subject to production

5. EAS condition:Tj=25℃,V_{DD}=50V,V_G=10V,L=0.5mH,Rg=25Ω

Test Circuit

1) E_{AS} Test Circuit

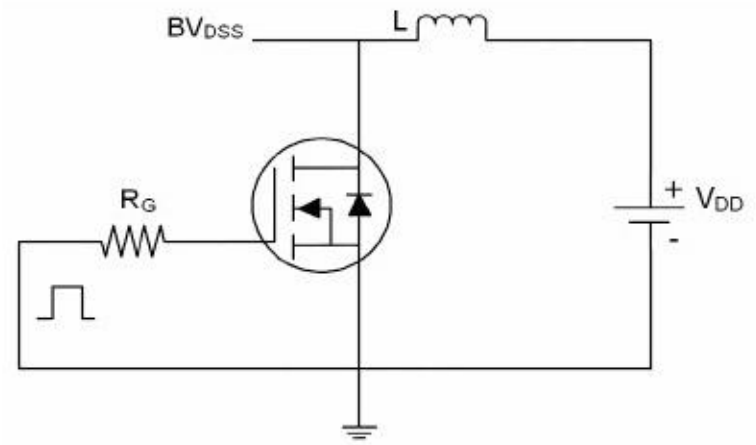

2) Gate Charge Test Circuit

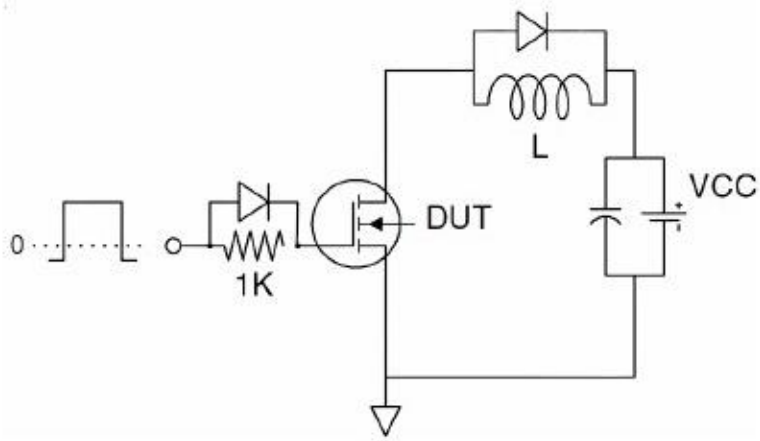

3) Switch Time Test Circuit

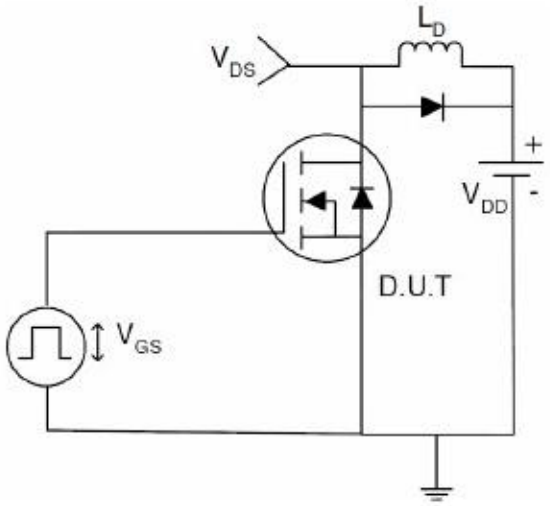

Typical Electrical and Thermal Characteristics (Curves)

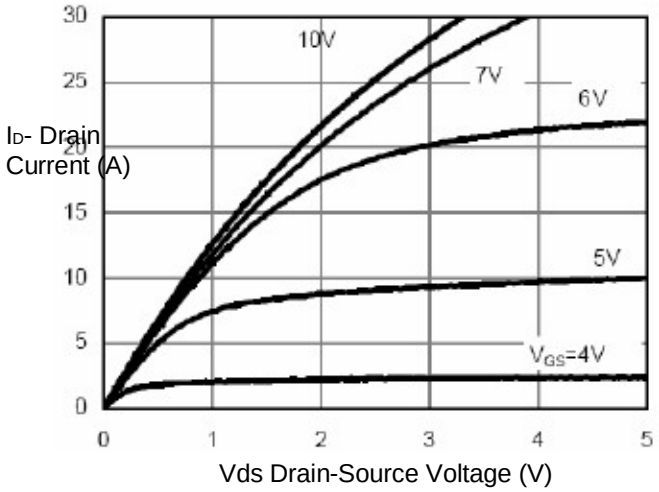

Figure 1 Output Characteristics

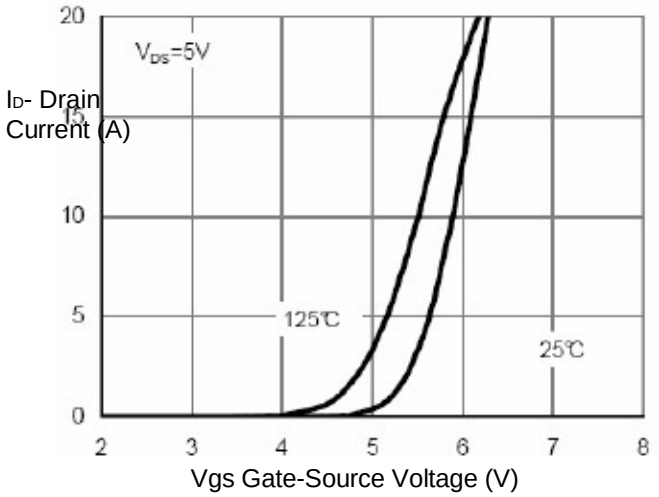

Figure 2 Transfer Characteristics

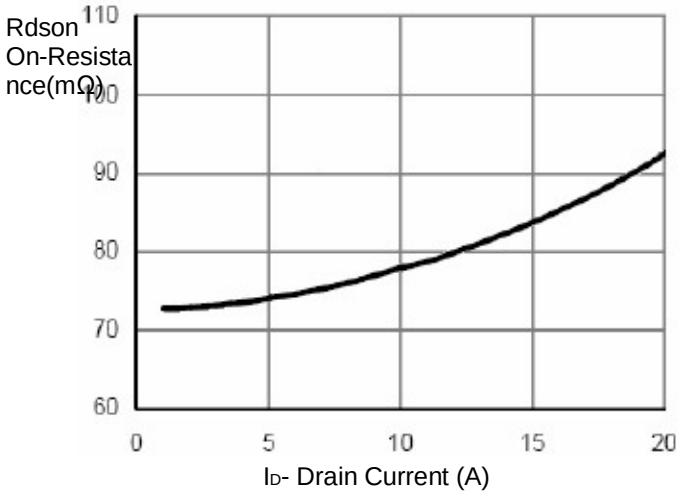

Figure 3 Rdson- Drain Current

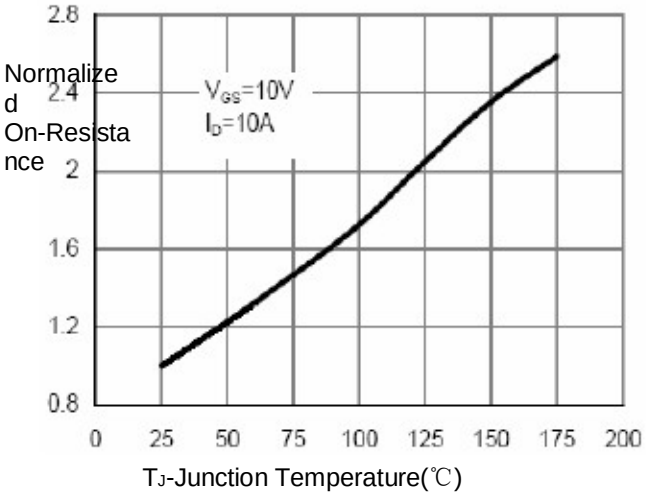

Figure 4 Rdson-JunctionTemperature

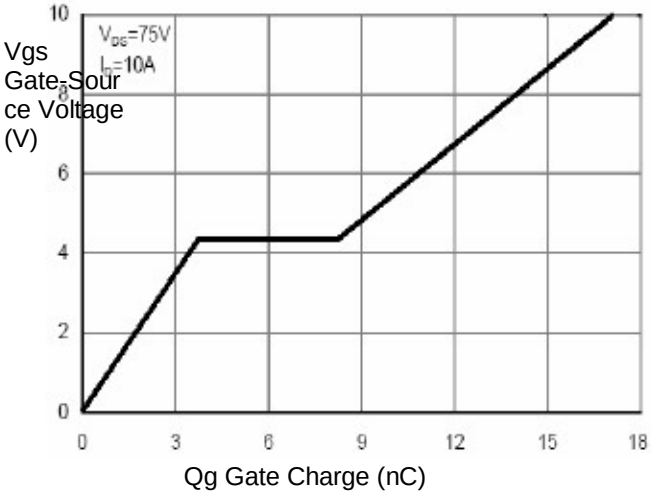

Figure 5 Gate Charge

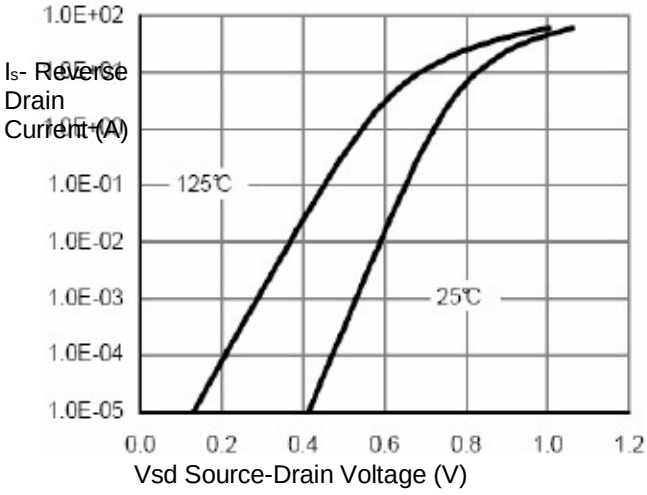

Figure 6 Source- Drain Diode Forward

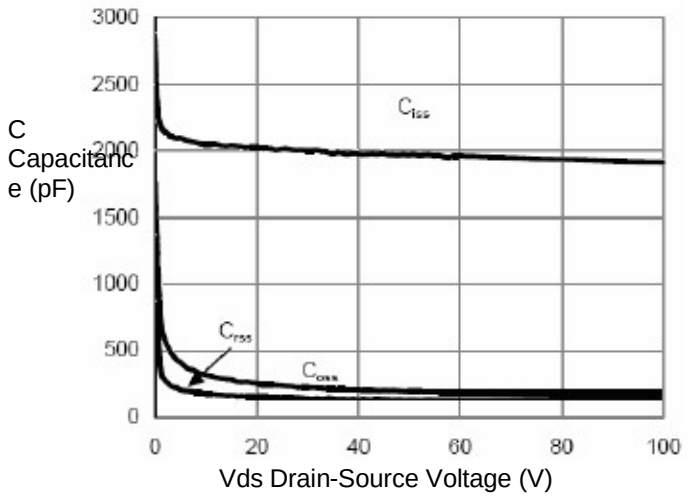

Figure 7 Capacitance vs Vds

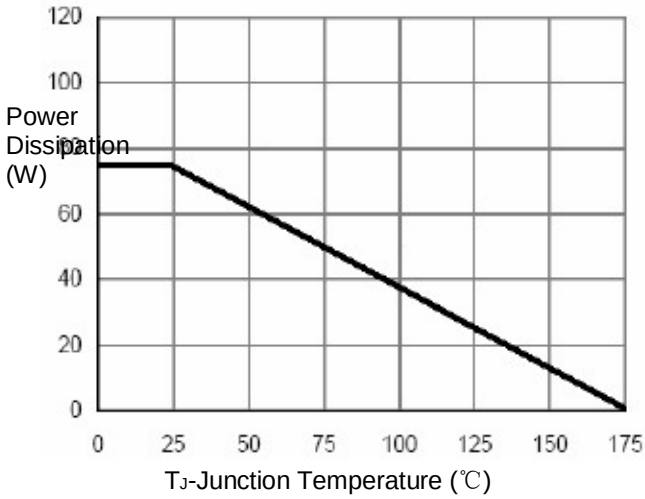

Figure 9 Power De-rating

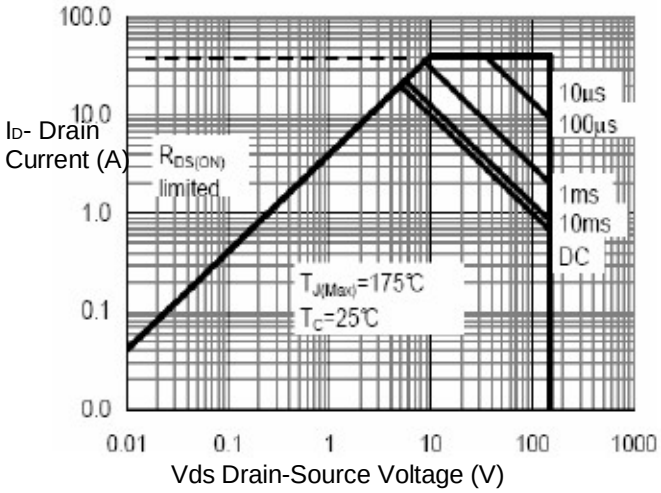

Figure 8 Safe Operation Area

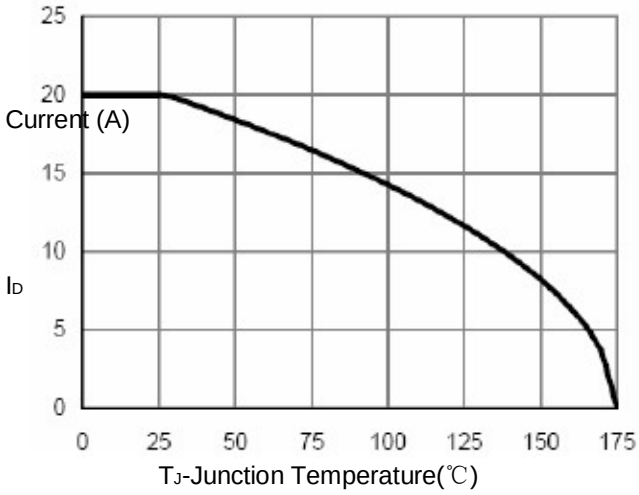

Figure 10ID Current- Junction Temperature

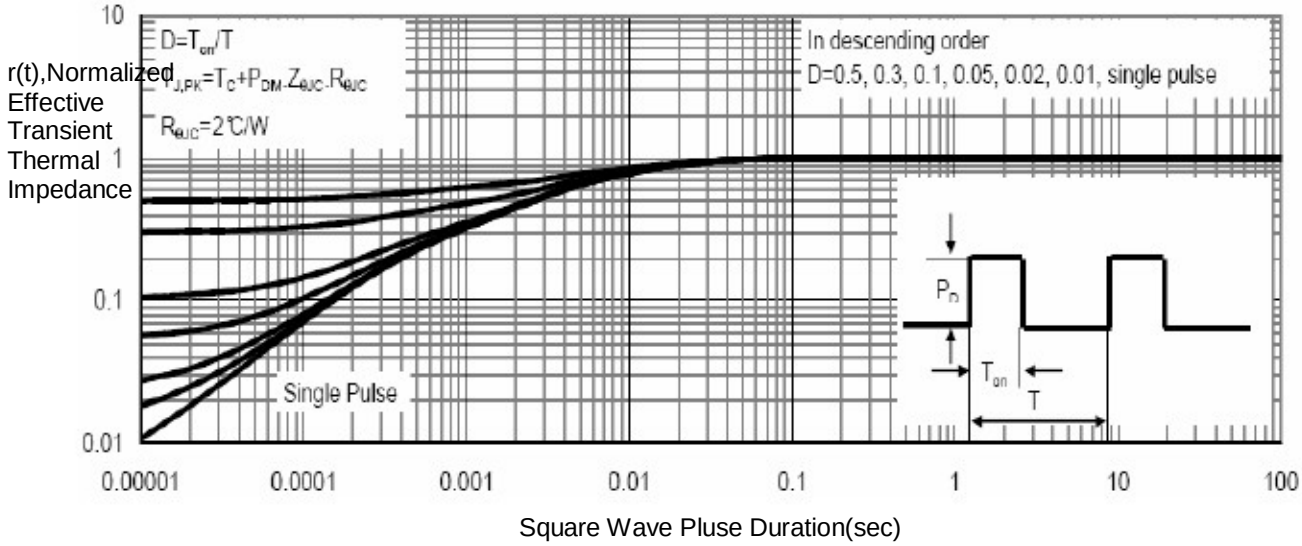

Figure 11 Normalized Maximum Transient Thermal Impedance

TO-220-3L Package Information

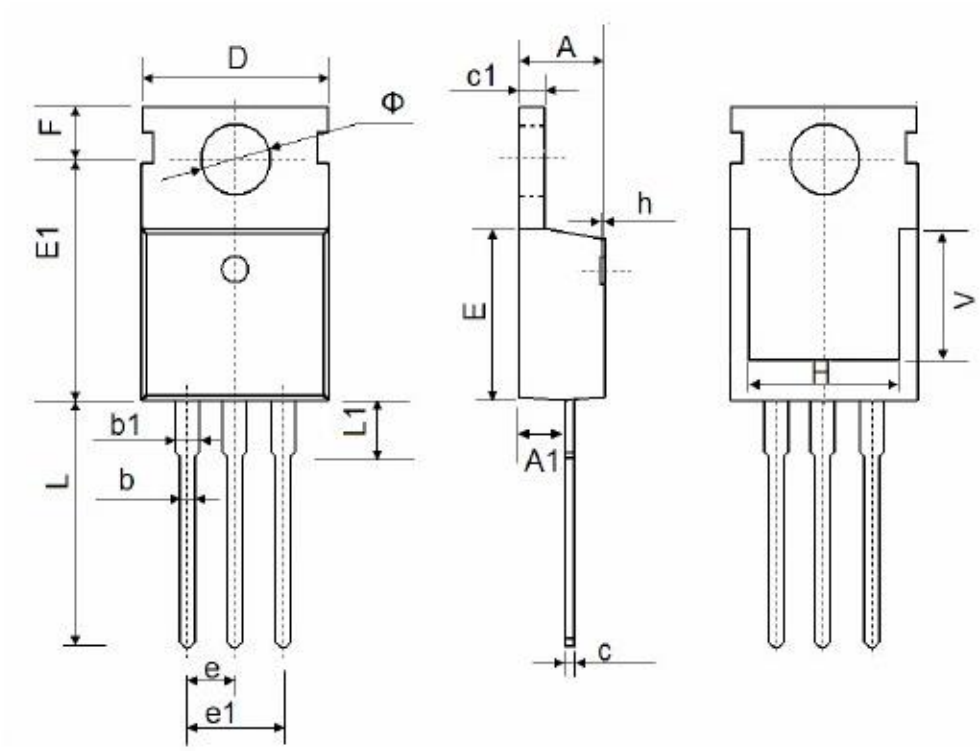

Symbol	Dimensions In Millimeters		Dimensions In Inches	
	Min.	Max.	Min.	Max.
A	4.400	4.600	0.173	0.181
A1	2.250	2.550	0.089	0.100
b	0.710	0.910	0.028	0.036
b1	1.170	1.370	0.046	0.054
c	0.330	0.650	0.013	0.026
c1	1.200	1.400	0.047	0.055
D	9.910	10.250	0.390	0.404
E	8.9500	9.750	0.352	0.384
E1	12.650	12.950	0.498	0.510
e	2.540 TYP.		0.100 TYP.	
e1	4.980	5.180	0.196	0.204
F	2.650	2.950	0.104	0.116
H	7.900	8.100	0.311	0.319
h	0.000	0.300	0.000	0.012
L	12.900	13.400	0.508	0.528
L1	2.850	3.250	0.112	0.128
V	7.500 REF.		0.295 REF.	
Φ	3.400	3.800	0.134	0.150