Dimensions
(Unit=mm)
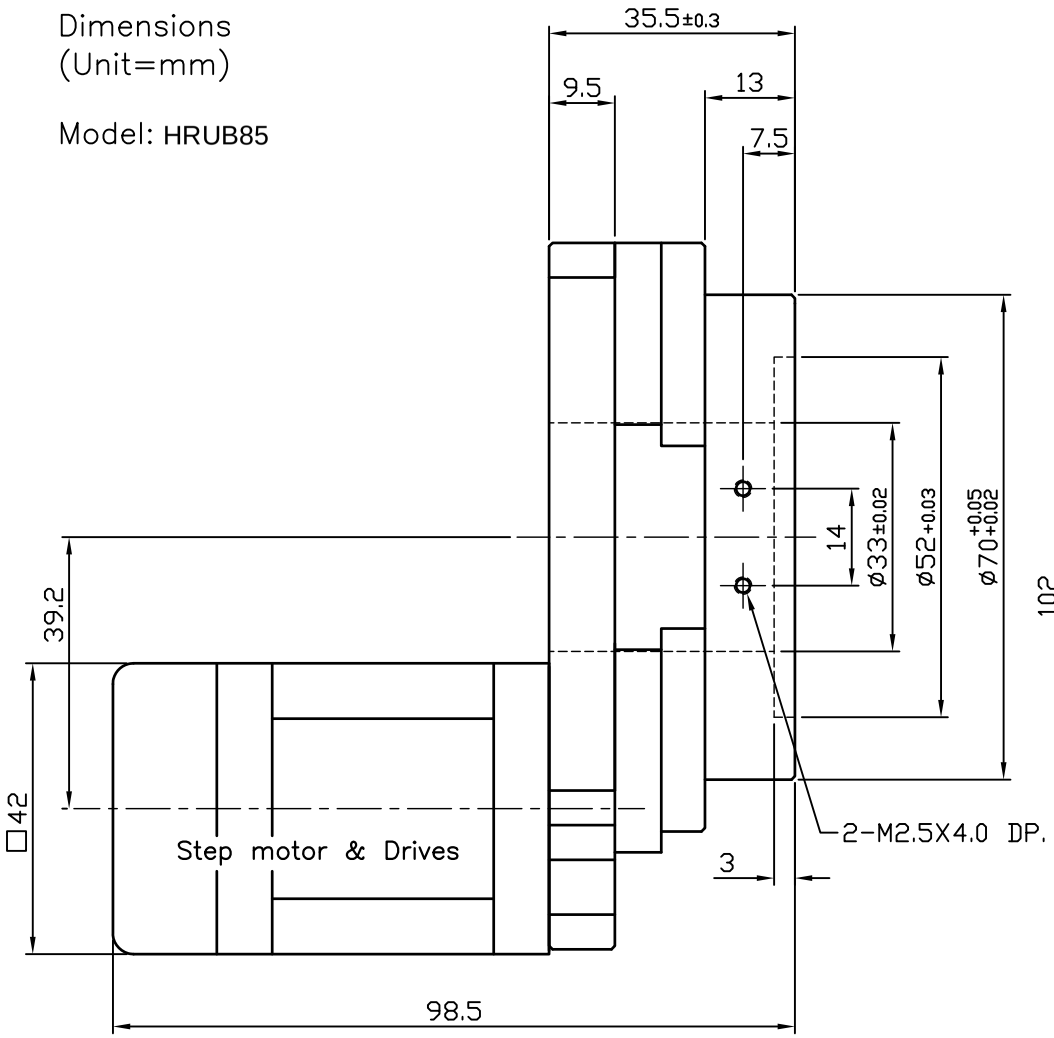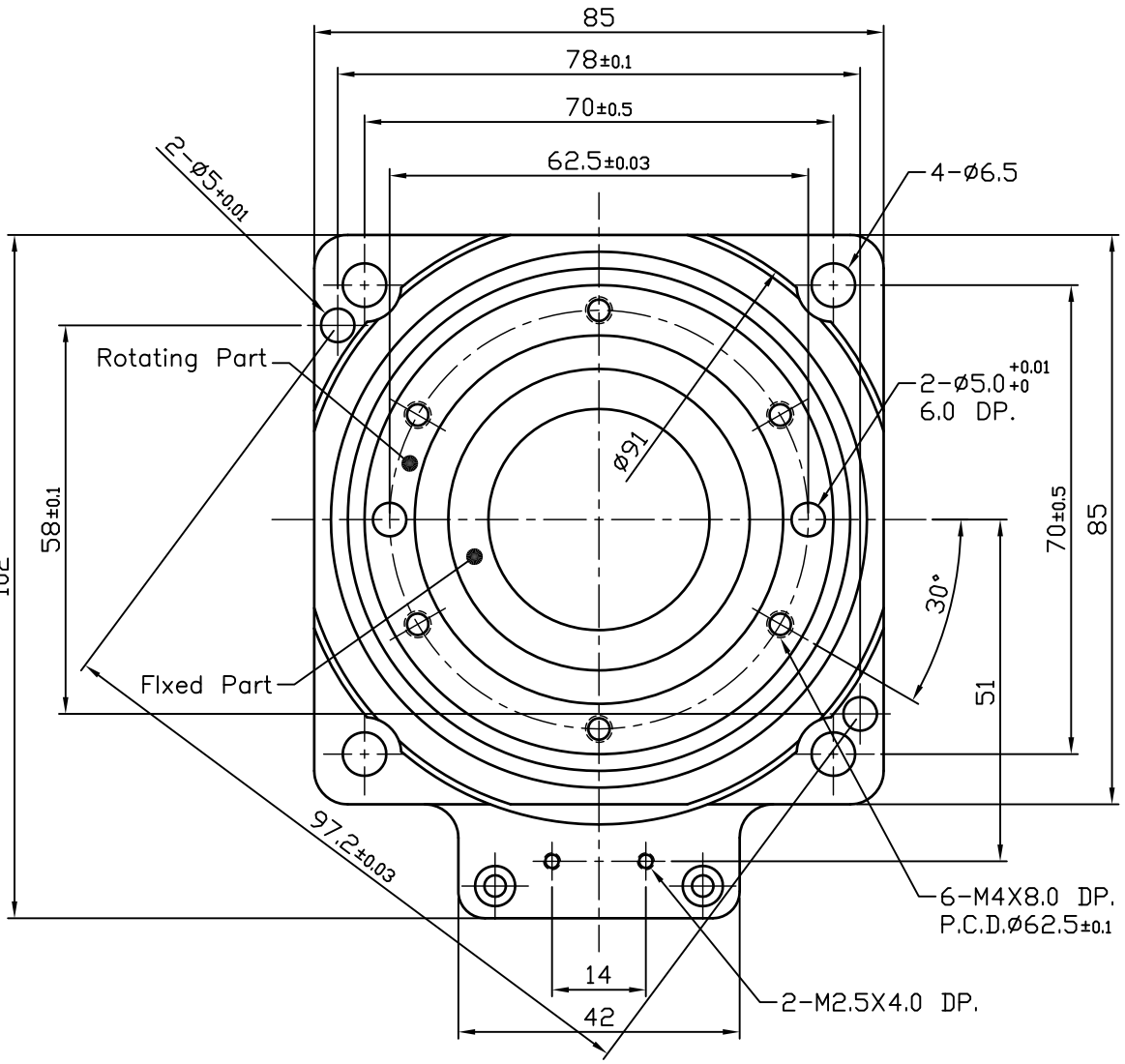
Model: HRUB85