REV	DESCRIPTION	APPRO.	CHANGE	DATE
A0	新版发行		CINDY	

Pb Process Capable

RoHS Compliant 2002/95/EC

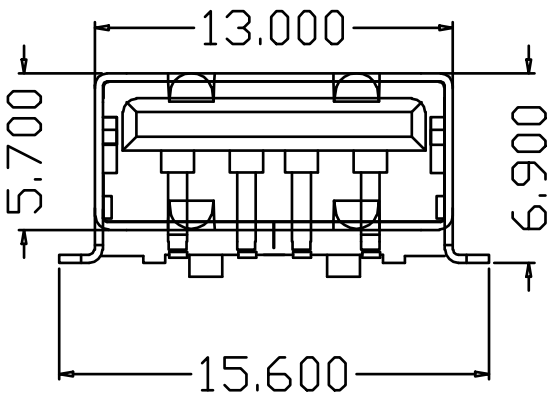

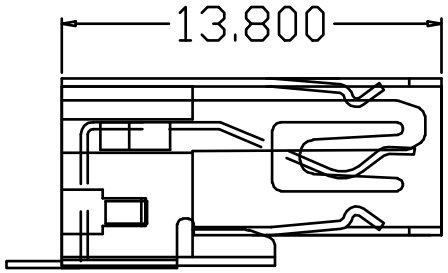

受控文件

佳兴电子有限公司

14.10.11

图文发行章

规格说明:Specifications:

电气特性:Electrical:

1.额定电流: Current Rating
1.5A/contact terminal

2.额定电压: Voltage Rating
30V DC

3.接触阻抗:Contact Resistance
30 milliohms MAX

4.耐电压:Dielectnic Withstanding Voltage:
500 V AC AT Sea Level

5.绝缘阻抗:Lnsulation Resistance:
1000MEGA ohms MIN

机械特性:Mechanical:

1.插拔力: Cnnector Mate and Unmate Force
Mate force:3.57kgf(MAX)
Unmate force:1.02kgf(MIN)

2.端子保持力: Terminal Retenion
1.0kgf(MIN)

原材料:Matorial:

1.胶壳:Housing:
Hing Temperature Tnermaplastics,

2.端子:Contact:Copper Alloy C2680

3.外壳:Shell: Copper Alloy C2680/SPCC

电镀:Finish:

1.端子:Contact: Plated Gold in Mating Area;
Tin On Solder Tails
端子插接处镀50U"(MIN)镍,焊脚区域镀100—200U"锡上1U"

2.外壳:Shell:
铜壳插接处镀80U"(MIN)镍
Nickel Plating

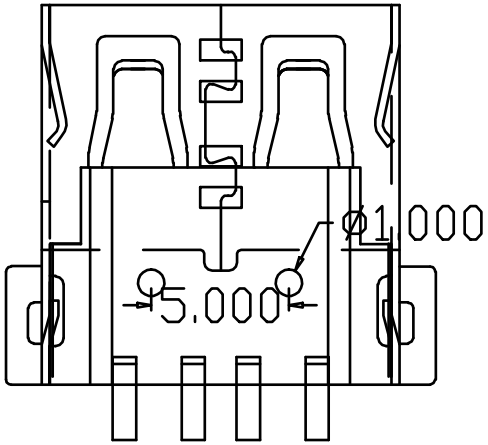

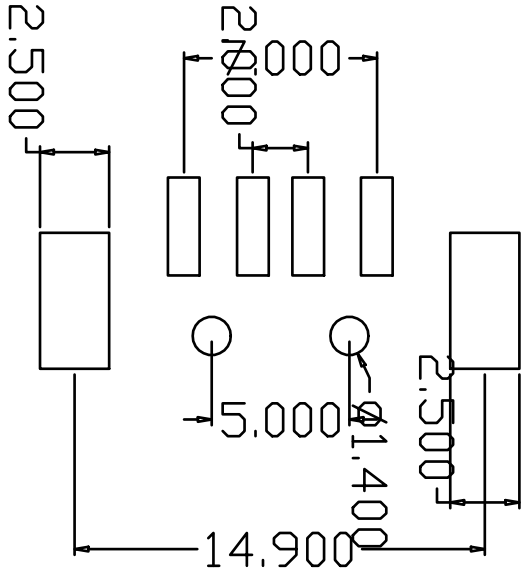

PCB LAYOUT

TOPLY 佳兴电子有限公司

QUALITY SYMBOLS	GENERAL TOLERANCES (UNLESS SPECIFIED)			
	MM		INCH	
▼ ″0	.XX	±0.20	.XX	±0.10
	.X	±0.30	.X	±0.20
▽ C ″0	X.	±0.50	X.	±0.50
	ANGULAR ±0.10°			

SIGNATORY		DATE
DRAW	CINDY	
DESIGN	CINDY	
CHECK		罗邵阳
APPRO.		罗邵阳

E	TITLE:		
PART NO.			
DWG NO.			
(OLD)PART NO.			
SCALE 1:1	UNIT:mm		SHEET: 1 of 1