Product NO.	DOSIN-801-0034			
REV	DESCRIPTION	DWN	DATE	APPROVEN
A	First issue	JIM	2012/11/02	John kine

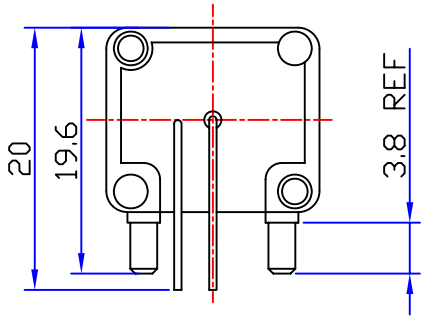

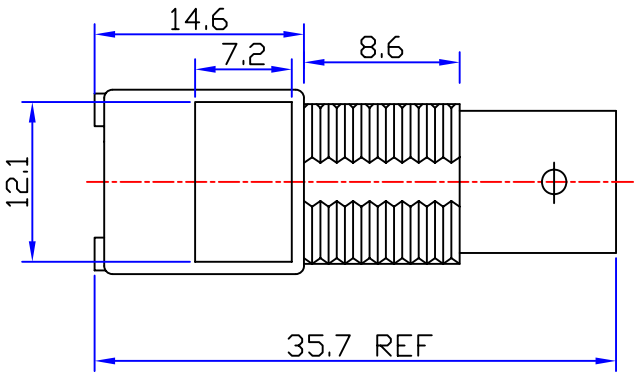

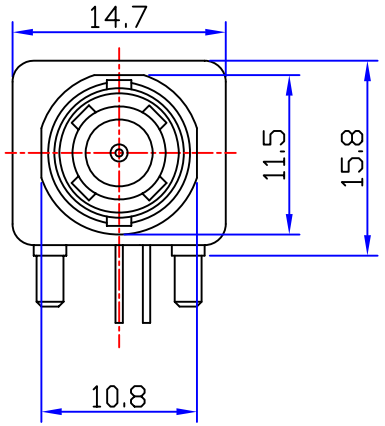

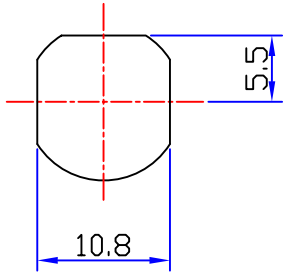

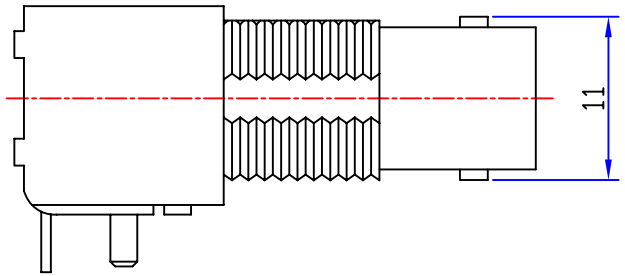

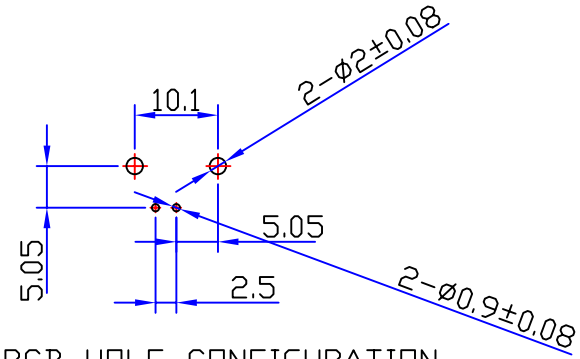

PCB HOLE CONFIGURATION
RECOMMENDED PANEL CUTOUTS

Specifications

Impedance:50 Ohms
Frequency Range:DC~3G
VSWR:1.3MAX
Working Voltage:500V rms @ sea level
Insulation Resistance:5000 Ohms min
Temperature Range:-55℃ TO +155℃
Relative Temperature:≤95%(40° C±2° C)
Drawings products are in line with ROHS standards

NO	DESCRIPTION	MATERIAL	FINISHED	QTY
C	INSULATOR	POM	NONE	1
B	CONTACT	BRASS	GOLD	1
A	BODY	ZINC	NICKEL	1

NOTE:

DRAWN Zelin. Zhang	2012/11/10	Tolerance	0-6 ±0.15 6-30 ±0.20 30-120 ±0.5 Angular ±2°
CHECKED		View	
APPROVALS John Kine	12/04.2012	UNIT	MM
		SCALE	1:1

Dosin Industrial(H.K)Co.Ltd
东莞市德索五金电子制品有限公司
Dosin Hardware Electronics Co.,Ltd
E-mail: dosin2005@163.com
dosin2005@dosin-china.com
Web: http://www.dosinconn.com
TEL: (0086)769-81153906
FAX: (0086)769-81875836

Name:	BNC CONNECTOR DNN		
SIZE A	Product NO. DOSIN-801-0034		REV B
DateTime 2012/11/02	CAD FILE D/company drawings/BD		SHEET: 1 OF 1