Product NO.	DOSIN-803-0001			
REV	DESCRIPTION	DWN	DATE	APPROVEN
A	First issue	Mr. Wang	2009/08/07	John kine
B	Add :DOSIN-803-0001	Zelin. Zhang	2012/05/06	John kine

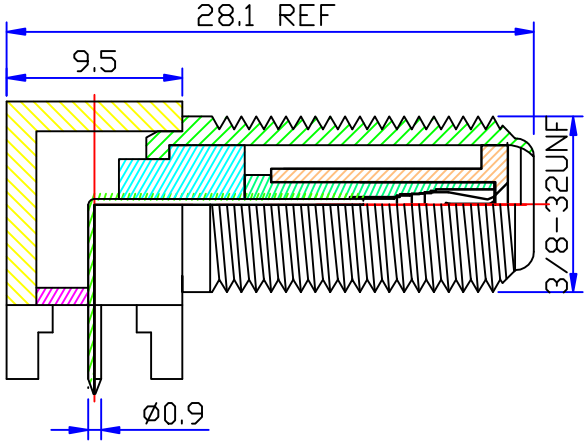

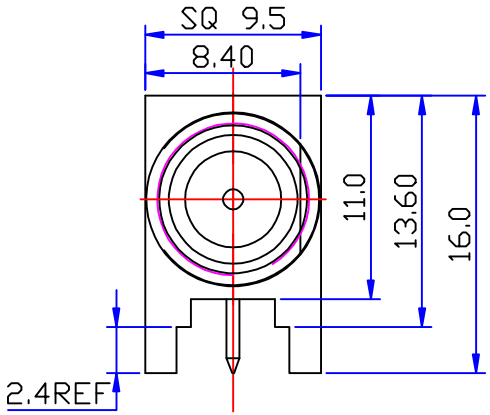

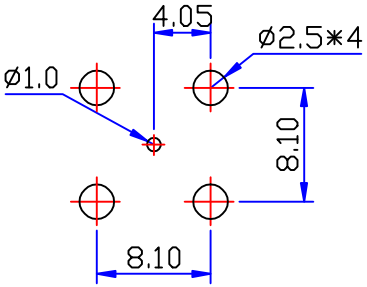

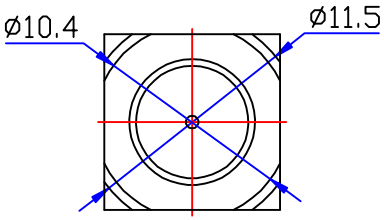

SPECIFICATIONS:

Impedance: 75 Ohms
Frequency Range:DC~3G
VSWR:30DdB Return loss @ 1GHZ
Working Voltage:15 watts continuous
Insulation Resistance:5000 Ohms min
Temperature Range:-40℃ TO +60℃
Drawings products are in line with ROHS standards

NO	Component Number	Material	Finish
1	Body	Brass	NI:80-120u"
2	Insulator	PP	White
3	Center contact	Phosphor	SN
4			
5			
6			
7			
8			
9			
10			

NOTE:

DRAWN	Zelin. Zhang	2012/05/06
CHECKED		
APPROVALS	John Kine	05/05.2012

Tolerance	X. ±0.15 X.X ±0.10 X.XX ±0.05 Angular ±5°
View	
UNIT	MM
SCALE	1:1

DOSIN RF CONNECTOR Dosin Industrial (H.K) Co. Ltd
东莞市德索五金电子制品有限公司
Dosin Hardware Electronics Co., Ltd
E-mail:dosin20050163.com
dosin2005@dosin-china.com
Web:http://www.dosinconn.com
TEL:(0086)769-81153906
FAX:(0086)769-81875836

Name: F Jack Right angle PCB Mount

SIZE	Product NO.	REV
A	DOSIN-803-0001	B

DateTime	CAD FILE	SHEET: 1 OF 1
2012/05/06	H/company drawings/BD	