# Dual-Channel CC/CV Mode Synchronous Step-Down Controller

## DESCRIPTION

The EUP3468B is a dual-channel synchronous step-down controller capable of driving 5A continuous load with excellent line and load regulation. The EUP3468B operates in either CC (Constant Current) mode or CV (Constant Voltage) mode with an input voltage range from 8V to 36V. The EUP3468B can be configured as single output or dual outputs with independent programmable CC threshold for current limitation. The EUP3468B provides programmable cable compensation by adjusting external resistor divider. External shutdown function can be controlled by pulling COMP pin to a level below 0.14V. The EUP3468B stops switching when the output reaches over voltage threshold which is set by internal resistor divider.

Fault protection includes secondary cycle-by-cycle current limit, short circuit protection and thermal shutdown. Internal soft-start minimizes the inrush supply current and the output overshoot at initial startup.

The EUP3468B is available in MSOP-10 package.

## FEATURES

- 8V to 36V Wide Input Operating Range
- 40V Input Voltage Surge
- 80kHz~800kHz Switching Frequency Selection
- Dual Channel CC/CV Mode Control
- Up to 5A Output Current
- +/- 1% Voltage Reference Accuracy
- +/- 4% Constant Current Accuracy
- Programmable Cable Compensation
- Internal Soft Start
- Single Pin to External Compensation and Shutdown Control
- Output Over Voltage Protection
- Hiccup Short Circuit Protection
- Secondary Cycle-by-Cycle Current Limit
- Thermal Shutdown
- Available in MSOP-10 Package
- RoHS Compliant and 100% Lead(Pb)-Free Halogen-Free

## APPLICATIONS

- Car Charger
- Portable charger applications
- DC/DC converters with current limited

## Typical Application Circuit

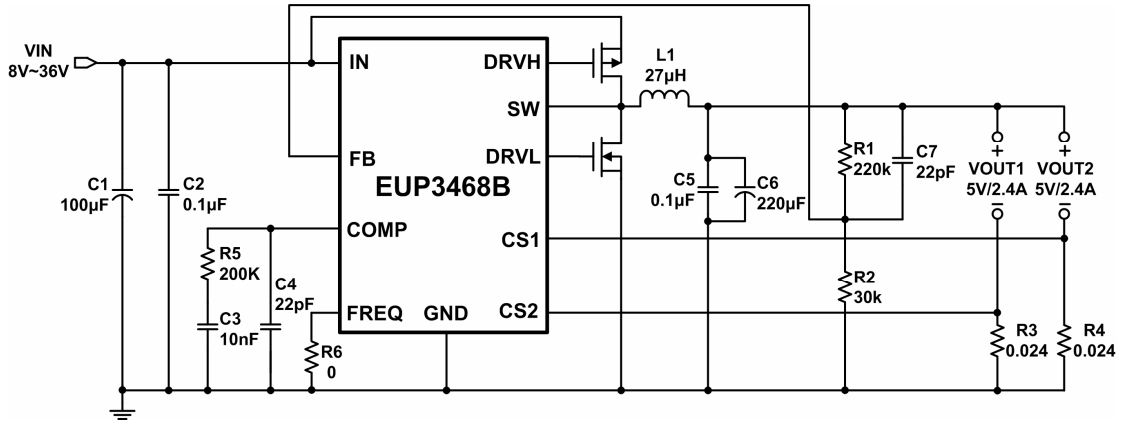


**Figure 1. Application Circuit**